The Behavioral Description of Linear Time-invariant Systems

Jan Willem Polderman

Department of Applied Mathematics
University of Twente

Time Domain Description of Linear Systems

Definition

A behavior $\mathfrak{B}$ is called *autonomous* if for all $w_1, w_2 \in \mathfrak{B}$

$$w_1(t) = w_2(t) \text{ for } t \leq 0 \quad \Rightarrow \quad w_1(t) = w_2(t) \text{ for almost all } t.$$

In words: the future of every trajectory is completely determined by its past.

Theorem

Let $P(\xi) \in \mathbb{R}[\xi]$ *be a monic polynomial and let* $\lambda_i \in \mathbb{C}$, $i = 1, \ldots, N$, *be the distinct roots of* $P(\xi)$ *of multiplicity* n_i*:* $P(\xi) = \prod_{k=1}^{N} (\xi - \lambda_k)^{n_k}$.
The corresponding behavior $\mathfrak{B}$ *defined by* $P(\frac{d}{dt})w = 0$ *is autonomous*

Theorem

Let $P(\xi) \in \mathbb{R}[\xi]$ *be a monic polynomial and let* $\lambda_i \in \mathbb{C}$, $i = 1, \ldots, N$, *be the distinct roots of* $P(\xi)$ *of multiplicity* n_i*:* $P(\xi) = \prod_{k=1}^{N} (\xi - \lambda_k)^{n_k}$.
The corresponding behavior $\mathfrak{B}$ *defined by* $P(\frac{d}{dt})w = 0$ *is autonomous and is a finite-dimensional subspace of* $\mathcal{C}^\infty(\mathbb{R}, \mathbb{C})$ *of dimension* $n = \deg P(\xi)$.

Theorem

Let $P(\xi) \in \mathbb{R}[\xi]$ be a monic polynomial and let $\lambda_i \in \mathbb{C}$, $i = 1, \ldots, N$, be the distinct roots of $P(\xi)$ of multiplicity n_i: $P(\xi) = \prod_{k=1}^{N} (\xi - \lambda_k)^{n_k}$.
The corresponding behavior $\mathfrak{B}$ defined by $P(\frac{d}{dt})w = 0$ is autonomous and is a finite-dimensional subspace of $\mathcal{C}^\infty(\mathbb{R}, \mathbb{C})$ of dimension $n = \deg P(\xi)$. Moreover, $w \in \mathfrak{B}$ if and only if it is of the form

$$w(t) = \sum_{k=1}^{N} r_k(t) e^{\lambda_k t}$$

with $r_k(\xi) \in \mathbb{C}[\xi]$ an arbitrary polynomial of degree less than n_k.

The polynomial $P(\xi)$ is called the *characteristic polynomial* of $\mathfrak{B}$, and the roots of $P(\xi)$ are called the *characteristic values.*

Theorem

Let $P(\xi) \in \mathbb{R}^{q \times q}[\xi]$ *and let* $\lambda_i \in \mathbb{C}$, $i = 1, \ldots, N$, *be the distinct roots of* $\det P(\xi)$ *of multiplicity* n_i*:* $\det P(\xi) = c \prod_{k=1}^{N} (\xi - \lambda_k)^{n_k}$ *for some nonzero constant* c*.*

Theorem

Let $P(\xi) \in \mathbb{R}^{q\times q}[\xi]$ *and let* $\lambda_i \in \mathbb{C}$, $i = 1, \ldots, N$, *be the distinct roots of* $\det P(\xi)$ *of multiplicity* n_i*:* $\det P(\xi) = c\prod_{k=1}^{N}(\xi - \lambda_k)^{n_k}$ *for some nonzero constant* c*. The corresponding behavior* $\mathfrak{B}$ *is autonomous and is a finite-dimensional subspace of* $\mathcal{C}^\infty(\mathbb{R}, \mathbb{C}^q)$ *of dimension* $n = \deg\det P(\xi)$*.*

Theorem

Let $P(\xi) \in \mathbb{R}^{q\times q}[\xi]$ *and let* $\lambda_i \in \mathbb{C}$, $i = 1, \ldots, N$, *be the distinct roots of* $\det P(\xi)$ *of multiplicity* n_i*:* $\det P(\xi) = c\prod_{k=1}^{N}(\xi - \lambda_k)^{n_k}$ *for some nonzero constant* c*. The corresponding behavior* $\mathfrak{B}$ *is autonomous and is a finite-dimensional subspace of* $\mathcal{C}^\infty(\mathbb{R}, \mathbb{C}^q)$ *of dimension* $n = \deg\det P(\xi)$*. Moreover,* $w \in \mathfrak{B}$ *if and only if it is of the form*

$$w(t) = \sum_{i=1}^{N}\sum_{j=0}^{n_i-1} B_{ij} t^j e^{\lambda_i t},$$

Theorem

Let $P(\xi) \in \mathbb{R}^{q\times q}[\xi]$ *and let* $\lambda_i \in \mathbb{C}$, $i = 1, \ldots, N$, *be the distinct roots of* $\det P(\xi)$ *of multiplicity* n_i*:* $\det P(\xi) = c\prod_{k=1}^{N}(\xi - \lambda_k)^{n_k}$ *for some nonzero constant* c*. The corresponding behavior* $\mathfrak{B}$ *is autonomous and is a finite-dimensional subspace of* $\mathcal{C}^\infty(\mathbb{R}, \mathbb{C}^q)$ *of dimension* $n = \deg\det P(\xi)$*. Moreover,* $w \in \mathfrak{B}$ *if and only if it is of the form*

$$w(t) = \sum_{i=1}^{N}\sum_{j=0}^{n_i-1} B_{ij} t^j e^{\lambda_i t},$$

where the vectors $B_{ij} \in \mathbb{C}^q$ *satisfy the relations*

$$\sum_{j=\ell}^{n_i-1} \begin{pmatrix} j \\ \ell \end{pmatrix} P^{(j-\ell)}(\lambda_i) B_{ij} = 0, \quad i = 1, \ldots, N;\ \ell = 0, \ldots, n_i - 1.$$

The polynomial $\prod_{k=1}^{N}(\xi - \lambda_k)^{n_k}$ is called the *characteristic polynomial* of the autonomous behavior $\mathfrak{B}$. The roots of $\det P(\xi)$, $\lambda_1, \cdots, \lambda_N$, are called the characteristic values of the behavior. For the case that $P(\xi) = I\xi - A$ for some matrix A, the characteristic values are just the eigenvalues of A.

The polynomial $\prod_{k=1}^{N}(\xi - \lambda_k)^{n_k}$ is called the *characteristic polynomial* of the autonomous behavior $\mathfrak{B}$. The roots of $\det P(\xi)$, $\lambda_1, \cdots, \lambda_N$, are called the characteristic values of the behavior. For the case that $P(\xi) = I\xi - A$ for some matrix A, the characteristic values are just the eigenvalues of A. The linear relations

$$\sum_{j=\ell}^{n_i-1} \begin{pmatrix} j \\ \ell \end{pmatrix} P^{(j-\ell)}(\lambda_i) B_{ij} = 0, \quad i = 1, \ldots, N;\ \ell = 0, \ldots, n_i - 1.$$

are readily derived from the identity:

$$P(\frac{d}{dt}) A e^{\lambda t} = \qquad P(\lambda) A e^{\lambda t}$$

The polynomial $\prod_{k=1}^{N}(\xi - \lambda_k)^{n_k}$ is called the *characteristic polynomial* of the autonomous behavior $\mathfrak{B}$. The roots of $\det P(\xi)$, $\lambda_1, \cdots, \lambda_N$, are called the characteristic values of the behavior. For the case that $P(\xi) = I\xi - A$ for some matrix A, the characteristic values are just the eigenvalues of A. The linear relations

$$\sum_{j=\ell}^{n_i-1} \begin{pmatrix} j \\ \ell \end{pmatrix} P^{(j-\ell)}(\lambda_i) B_{ij} = 0, \quad i = 1, \ldots, N;\ \ell = 0, \ldots, n_i - 1.$$

are readily derived from the identity:

$$\frac{d}{d\lambda} P(\frac{d}{dt}) A e^{\lambda t} = \qquad P(\lambda) A e^{\lambda t}$$

The polynomial $\prod_{k=1}^{N}(\xi - \lambda_k)^{n_k}$ is called the *characteristic polynomial* of the autonomous behavior $\mathfrak{B}$. The roots of $\det P(\xi)$, $\lambda_1, \cdots, \lambda_N$, are called the characteristic values of the behavior. For the case that $P(\xi) = I\xi - A$ for some matrix A, the characteristic values are just the eigenvalues of A. The linear relations

$$\sum_{j=\ell}^{n_i-1} \begin{pmatrix} j \\ \ell \end{pmatrix} P^{(j-\ell)}(\lambda_i) B_{ij} = 0, \quad i = 1, \ldots, N;\ \ell = 0, \ldots, n_i - 1.$$

are readily derived from the identity:

$$\frac{d}{d\lambda} P(\frac{d}{dt}) A e^{\lambda t} = \frac{d}{d\lambda}(P(\lambda) A e^{\lambda t}$$

The polynomial $\prod_{k=1}^{N}(\xi - \lambda_k)^{n_k}$ is called the *characteristic polynomial* of the autonomous behavior $\mathfrak{B}$. The roots of $\det P(\xi)$, $\lambda_1, \cdots, \lambda_N$, are called the characteristic values of the behavior. For the case that $P(\xi) = I\xi - A$ for some matrix A, the characteristic values are just the eigenvalues of A. The linear relations

$$\sum_{j=\ell}^{n_i-1} \begin{pmatrix} j \\ \ell \end{pmatrix} P^{(j-\ell)}(\lambda_i) B_{ij} = 0, \quad i = 1, \ldots, N;\ \ell = 0, \ldots, n_i - 1.$$

are readily derived from the identity:

$$\frac{d}{d\lambda} P(\frac{d}{dt}) A e^{\lambda t} = \frac{d}{d\lambda}(P(\lambda) A e^{\lambda t})$$

The polynomial $\prod_{k=1}^{N}(\xi-\lambda_k)^{n_k}$ is called the *characteristic polynomial* of the autonomous behavior $\mathfrak{B}$. The roots of $\det P(\xi)$, $\lambda_1,\cdots,\lambda_N$, are called the characteristic values of the behavior. For the case that $P(\xi)=I\xi-A$ for some matrix A, the characteristic values are just the eigenvalues of A. The linear relations

$$\sum_{j=\ell}^{n_i-1}\begin{pmatrix} j \\ \ell \end{pmatrix} P^{(j-\ell)}(\lambda_i)B_{ij}=0, \quad i=1,\ldots,N;\ \ell=0,\ldots,n_i-1.$$

are readily derived from the identity:

$$\begin{aligned}\frac{d}{d\lambda}P(\frac{d}{dt})A\mathrm{e}^{\lambda t} &= \frac{d}{d\lambda}(P(\lambda)A\mathrm{e}^{\lambda t}) \\ &= P'(\lambda)A\mathrm{e}^{\lambda t}+P(\lambda)At\mathrm{e}^{\lambda t}\end{aligned}$$

The polynomial $\prod_{k=1}^{N}(\xi - \lambda_k)^{n_k}$ is called the *characteristic polynomial* of the autonomous behavior $\mathfrak{B}$. The roots of $\det P(\xi)$, $\lambda_1, \cdots, \lambda_N$, are called the characteristic values of the behavior. For the case that $P(\xi) = I\xi - A$ for some matrix A, the characteristic values are just the eigenvalues of A. The linear relations

$$\sum_{j=\ell}^{n_i-1} \begin{pmatrix} j \\ \ell \end{pmatrix} P^{(j-\ell)}(\lambda_i) B_{ij} = 0, \quad i = 1, \ldots, N;\ \ell = 0, \ldots, n_i - 1.$$

are readily derived from the identity:

$$\begin{aligned} \frac{d}{d\lambda} P(\frac{d}{dt}) A e^{\lambda t} &= \frac{d}{d\lambda}(P(\lambda) A e^{\lambda t}) \\ &= P'(\lambda) A e^{\lambda t} + P(\lambda) A t e^{\lambda t} \end{aligned}$$

and higher order analogues.

Definition

Let $\mathfrak{B}$ be a behavior with signal space $\mathbb{R}^q$. Partition the signal space as $\mathbb{R}^q = \mathbb{R}^m \times \mathbb{R}^p$ and $w \in \mathcal{C}^\infty(\mathbb{R}, \mathbb{R}^q)$ correspondingly as $w = \mathrm{col}(w_1, w_2)$ ($w_1 \in \mathcal{C}^\infty(\mathbb{R}, \mathbb{R}^m)$ and $w_2 \in \mathcal{C}^\infty(\mathbb{R}, \mathbb{R}^p)$). This partition is called an *input/output partition* if:

Definition

Let $\mathfrak{B}$ be a behavior with signal space $\mathbb{R}^q$. Partition the signal space as $\mathbb{R}^q = \mathbb{R}^m \times \mathbb{R}^p$ and $w \in \mathcal{C}^\infty(\mathbb{R}, \mathbb{R}^q)$ correspondingly as $w = \mathrm{col}(w_1, w_2)$ ($w_1 \in \mathcal{C}^\infty(\mathbb{R}, \mathbb{R}^m)$ and $w_2 \in \mathcal{C}^\infty(\mathbb{R}, \mathbb{R}^p)$). This partition is called an *input/output partition* if:

1. w_1 is *free*; i.e., for all $w_1 \in \mathcal{C}^\infty(\mathbb{R}, \mathbb{R}^m)$, there exists a $w_2 \in \mathcal{C}^\infty(\mathbb{R}, \mathbb{R}^p)$ such that $\mathrm{col}(w_1, w_2) \in \mathfrak{B}$.

Definition

Let $\mathfrak{B}$ be a behavior with signal space $\mathbb{R}^q$. Partition the signal space as $\mathbb{R}^q = \mathbb{R}^m \times \mathbb{R}^p$ and $w \in \mathcal{C}^\infty(\mathbb{R}, \mathbb{R}^q)$ correspondingly as $w = \mathrm{col}(w_1, w_2)$ ($w_1 \in \mathcal{C}^\infty(\mathbb{R}, \mathbb{R}^m)$ and $w_2 \in \mathcal{C}^\infty(\mathbb{R}, \mathbb{R}^p)$). This partition is called an *input/output partition* if:

1. w_1 is *free*; i.e., for all $w_1 \in \mathcal{C}^\infty(\mathbb{R}, \mathbb{R}^m)$, there exists a $w_2 \in \mathcal{C}^\infty(\mathbb{R}, \mathbb{R}^p)$ such that $\mathrm{col}(w_1, w_2) \in \mathfrak{B}$.
2. w_2 does not contain any further free components; i.e., given w_1, none of the components of w_2 can be chosen freely. Stated differently, w_1 is *maximally free*.

Definition

Let $\mathfrak{B}$ be a behavior with signal space $\mathbb{R}^q$. Partition the signal space as $\mathbb{R}^q = \mathbb{R}^m \times \mathbb{R}^p$ and $w \in \mathcal{C}^\infty(\mathbb{R}, \mathbb{R}^q)$ correspondingly as $w = \mathrm{col}(w_1, w_2)$ ($w_1 \in \mathcal{C}^\infty(\mathbb{R}, \mathbb{R}^m)$ and $w_2 \in \mathcal{C}^\infty(\mathbb{R}, \mathbb{R}^p)$). This partition is called an *input/output partition* if:

1. w_1 is *free*; i.e., for all $w_1 \in \mathcal{C}^\infty(\mathbb{R}, \mathbb{R}^m)$, there exists a $w_2 \in \mathcal{C}^\infty(\mathbb{R}, \mathbb{R}^p)$ such that $\mathrm{col}(w_1, w_2) \in \mathfrak{B}$.
2. w_2 does not contain any further free components; i.e., given w_1, none of the components of w_2 can be chosen freely. Stated differently, w_1 is *maximally free*.

If these hold, then w_1 is called an input variable and w_2 is called an *output variable*.

Definition

Let $\mathfrak{B}$ be a behavior with signal space $\mathbb{R}^q$. Partition the signal space as $\mathbb{R}^q = \mathbb{R}^m \times \mathbb{R}^p$ and $w \in \mathfrak{L}_1^{\mathrm{loc}}(\mathbb{R}, \mathbb{R}^q)$ correspondingly as $w = \mathrm{col}(w_1, w_2)$ ($w_1 \in \mathfrak{L}_1^{\mathrm{loc}}(\mathbb{R}, \mathbb{R}^m)$ and $w_2 \in \mathfrak{L}_1^{\mathrm{loc}}(\mathbb{R}, \mathbb{R}^p)$). This partition is called an proper *input/output partition* if:

Definition

Let $\mathfrak{B}$ be a behavior with signal space $\mathbb{R}^q$. Partition the signal space as $\mathbb{R}^q = \mathbb{R}^m \times \mathbb{R}^p$ and $w \in \mathfrak{L}_1^{\mathrm{loc}}(\mathbb{R}, \mathbb{R}^q)$ correspondingly as $w = \mathrm{col}(w_1, w_2)$ ($w_1 \in \mathfrak{L}_1^{\mathrm{loc}}(\mathbb{R}, \mathbb{R}^m)$ and $w_2 \in \mathfrak{L}_1^{\mathrm{loc}}(\mathbb{R}, \mathbb{R}^p)$). This partition is called an proper *input/output partition* if:

1. w_1 is properly *free*; i.e., for all $w_1 \in \mathfrak{L}_1^{\mathrm{loc}}(\mathbb{R}, \mathbb{R}^m)$, there exists a $w_2 \in \mathfrak{L}_1^{\mathrm{loc}}(\mathbb{R}, \mathbb{R}^p)$ such that $\mathrm{col}(w_1, w_2) \in \mathfrak{B}$, and moreover w_2 is at least as smooth as w_1.

Definition

Let $\mathfrak{B}$ be a behavior with signal space $\mathbb{R}^q$. Partition the signal space as $\mathbb{R}^q = \mathbb{R}^m \times \mathbb{R}^p$ and $w \in \mathfrak{L}_1^{\mathrm{loc}}(\mathbb{R}, \mathbb{R}^q)$ correspondingly as $w = \mathrm{col}(w_1, w_2)$ ($w_1 \in \mathfrak{L}_1^{\mathrm{loc}}(\mathbb{R}, \mathbb{R}^m)$ and $w_2 \in \mathfrak{L}_1^{\mathrm{loc}}(\mathbb{R}, \mathbb{R}^p)$). This partition is called an proper *input/output partition* if:

1. w_1 is properly *free*; i.e., for all $w_1 \in \mathfrak{L}_1^{\mathrm{loc}}(\mathbb{R}, \mathbb{R}^m)$, there exists a $w_2 \in \mathfrak{L}_1^{\mathrm{loc}}(\mathbb{R}, \mathbb{R}^p)$ such that $\mathrm{col}(w_1, w_2) \in \mathfrak{B}$, and moreover w_2 is at least as smooth as w_1.
2. w_2 does not contain any further free components; i.e., given w_1, none of the components of w_2 can be chosen freely. Stated differently, w_1 is *maximally free*.

Definition

Let $\mathfrak{B}$ be a behavior with signal space $\mathbb{R}^q$. Partition the signal space as $\mathbb{R}^q = \mathbb{R}^m \times \mathbb{R}^p$ and $w \in \mathfrak{L}_1^{\mathrm{loc}}(\mathbb{R}, \mathbb{R}^q)$ correspondingly as $w = \mathrm{col}(w_1, w_2)$ ($w_1 \in \mathfrak{L}_1^{\mathrm{loc}}(\mathbb{R}, \mathbb{R}^m)$ and $w_2 \in \mathfrak{L}_1^{\mathrm{loc}}(\mathbb{R}, \mathbb{R}^p)$). This partition is called an proper *input/output partition* if:

1. w_1 is properly *free*; i.e., for all $w_1 \in \mathfrak{L}_1^{\mathrm{loc}}(\mathbb{R}, \mathbb{R}^m)$, there exists a $w_2 \in \mathfrak{L}_1^{\mathrm{loc}}(\mathbb{R}, \mathbb{R}^p)$ such that $\mathrm{col}(w_1, w_2) \in \mathfrak{B}$, and moreover w_2 is at least as smooth as w_1.
2. w_2 does not contain any further free components; i.e., given w_1, none of the components of w_2 can be chosen freely. Stated differently, w_1 is *maximally free*.

If these hold, then w_1 is called an *proper input variable* and w_2 is called an *output variable*.

Theorem

Let $\mathfrak{B}$ be the behavior defined by

$$\mathfrak{B} = \{w = \mathrm{col}(u, y) \in \mathfrak{L}_1^{\mathrm{loc}}(\mathbb{R}, \mathbb{R}^m \times \mathbb{R}^p) \mid P(\frac{d}{dt})y = Q(\frac{d}{dt})u\},$$

and let $u \in \mathcal{C}^\infty(\mathbb{R}, \mathbb{R}^m)$. Let $P^{-1}(\xi)Q(\xi)$ be proper and its partial fraction expansion be given by

$$P^{-1}(\xi)Q(\xi) = A_0 + \sum_{i=1}^{N} \sum_{j=1}^{n_i} \frac{A_{ij}}{(\xi - \lambda_i)^j}.$$

Theorem

Let $\mathfrak{B}$ be the behavior defined by

$$\mathfrak{B} = \{w = \mathrm{col}(u, y) \in \mathfrak{L}_1^{\mathrm{loc}}(\mathbb{R}, \mathbb{R}^m \times \mathbb{R}^p) \mid P(\frac{d}{dt})y = Q(\frac{d}{dt})u\},$$

and let $u \in \mathcal{C}^\infty(\mathbb{R}, \mathbb{R}^m)$. Let $P^{-1}(\xi)Q(\xi)$ be proper and its partial fraction expansion be given by

$$P^{-1}(\xi)Q(\xi) = A_0 + \sum_{i=1}^{N} \sum_{j=1}^{n_i} \frac{A_{ij}}{(\xi - \lambda_i)^j}.$$

Define y by

$$y(t) := A_0 u(t) + \sum_{i=1}^{N} \sum_{j=1}^{n_i} A_{ij} \int_0^t \frac{(t-\tau)^{j-1}}{(j-1)!} e^{\lambda_i (t-\tau)} u(\tau) d\tau, \quad t \in \mathbb{R}.$$

Theorem

Let $\mathfrak{B}$ be the behavior defined by

$$\mathfrak{B} = \{w = \mathrm{col}(u, y) \in \mathfrak{L}_1^{\mathrm{loc}}(\mathbb{R}, \mathbb{R}^m \times \mathbb{R}^p) \mid P(\frac{d}{dt})y = Q(\frac{d}{dt})u\},$$

and let $u \in \mathcal{C}^\infty(\mathbb{R}, \mathbb{R}^m)$. Let $P^{-1}(\xi)Q(\xi)$ be proper and its partial fraction expansion be given by

$$P^{-1}(\xi)Q(\xi) = A_0 + \sum_{i=1}^{N} \sum_{j=1}^{n_i} \frac{A_{ij}}{(\xi - \lambda_i)^j}.$$

Define y by

$$y(t) := A_0 u(t) + \sum_{i=1}^{N} \sum_{j=1}^{n_i} A_{ij} \int_0^t \frac{(t-\tau)^{j-1}}{(j-1)!} e^{\lambda_i (t-\tau)} u(\tau) d\tau, \quad t \in \mathbb{R}.$$

Then $(u, y) \in \mathfrak{B}$.

Corollary

Let $\mathfrak{B}$ be as in the previous theorem. Then (u, y) defines a proper input/output partition.

Corollary

Let $\mathfrak{B}$ be as in the previous theorem. Then (u, y) defines a proper input/output partition.

This motivates:

Definition

A dynamical system represented by $P(\frac{d}{dt})y = Q(\frac{d}{dt})u$ with $P(\xi) \in \mathbb{R}^{p\times p}[\xi]$ and $Q(\xi) \in \mathbb{R}^{p\times m}[\xi]$ is said to be in *input/output form* if it satisfies:

- $\det P(\xi) \neq 0$.
- $P^{-1}(\xi)Q(\xi)$ is a matrix of proper rational functions. (By Cramer's rule, the entries of $P^{-1}(\xi)Q(\xi)$ are rational functions.)

The following result expresses that the past of the output does not restrict the future of the input.

Theorem

Let $(u, y) \in \mathfrak{B}$ *as before. Let* $\tilde{u} \in \mathcal{C}^\infty(\mathbb{R}, \mathbb{R}^m)$ *be such that* $\tilde{u}(t) = u(t)$, $t \leq t_0$, *for some* $t_0 \in \mathbb{R}$. *Then there exists* $\tilde{y}$ *such that* $(\tilde{u}, \tilde{y}) \in \mathfrak{B}$ *and* $\tilde{y}(t) = y(t)$, $t \leq t_0$.

The following result expresses that the past of the output does not restrict the future of the input.

Theorem

Let $(u, y) \in \mathfrak{B}$ as before. Let $\tilde{u} \in \mathcal{C}^\infty(\mathbb{R}, \mathbb{R}^m)$ be such that $\tilde{u}(t) = u(t)$, $t \leq t_0$, for some $t_0 \in \mathbb{R}$. Then there exists $\tilde{y}$ such that $(\tilde{u}, \tilde{y}) \in \mathfrak{B}$ and $\tilde{y}(t) = y(t)$, $t \leq t_0$.

Proof.

By time invariance we may assume that $t_0 = 0$. Since $(u, y) \in \mathfrak{B}$, it follows that

$$y(t) = y_h(t) + A_0 u(t) + \sum_{i=1}^{N} \sum_{j=1}^{n_i} A_{ij} \int_0^t \frac{(t-\tau)^{(j-1)}}{(j-1)!} e^{\lambda_i (t-\tau)} u(\tau) d\tau,$$

where y_h satisfies $P(\frac{d}{dt}) y_h = 0$. Now simply define $\tilde{y}$ as before, but with u replaced by $\tilde{u}$. Since $\tilde{u}(t) = u(t)$ for $t \leq 0$, it follows that $\tilde{y}(t) = y(t)$ for $t \leq 0$. $\square$

Remark

The corollary implies non-anticipation. Indeed, the past of the output is not restricted by the future of the input. Nor is the future of the input restricted by the past of the output. This implies that y does not anticipate u, or simply that the relation between the input and the output is non-anticipating.

Theorem

Let $R(\xi) \in \mathbb{R}^{g \times q}[\xi]$ *be of full row rank. If* $g < q$*, then there exists a choice of columns of* $R(\xi) : c_{i_1}(\xi), \ldots, c_{i_g}(\xi) \in \mathbb{R}^{g \times q}[\xi]$ *such that*

Theorem

Let $R(\xi) \in \mathbb{R}^{g \times q}[\xi]$ be of full row rank. If $g < q$, then there exists a choice of columns of $R(\xi)$: $c_{i_1}(\xi), \ldots, c_{i_g}(\xi) \in \mathbb{R}^{g \times q}[\xi]$ such that

1. $\det \begin{bmatrix} c_{i_1}(\xi) & \cdots & c_{i_g}(\xi) \end{bmatrix} \neq 0.$

Theorem

Let $R(\xi) \in \mathbb{R}^{g \times q}[\xi]$ be of full row rank. If $g < q$, then there exists a choice of columns of $R(\xi)$: $c_{i_1}(\xi), \ldots, c_{i_g}(\xi) \in \mathbb{R}^{g \times q}[\xi]$ such that

1. $\det \begin{bmatrix} c_{i_1}(\xi) & \cdots & c_{i_g}(\xi) \end{bmatrix} \neq 0$.
2. $\begin{bmatrix} c_{i_1}(\xi) & \cdots & c_{i_g}(\xi) \end{bmatrix}^{-1} \begin{bmatrix} c_{i_{g+1}}(\xi) & \cdots & c_{i_q}(\xi) \end{bmatrix}$ *is a proper rational matrix.*

Theorem

Let $R(\xi) \in \mathbb{R}^{g\times q}[\xi]$ be of full row rank. If $g < q$, then there exists a choice of columns of $R(\xi)$: $c_{i_1}(\xi), \ldots, c_{i_g}(\xi) \in \mathbb{R}^{g\times q}[\xi]$ such that

1. $\det \begin{bmatrix} c_{i_1}(\xi) & \cdots & c_{i_g}(\xi) \end{bmatrix} \neq 0$.
2. $\begin{bmatrix} c_{i_1}(\xi) & \cdots & c_{i_g}(\xi) \end{bmatrix}^{-1} \begin{bmatrix} c_{i_{g+1}}(\xi) & \cdots & c_{i_q}(\xi) \end{bmatrix}$ *is a proper rational matrix.*

Proof.

Choose $R_1(\xi)$ as a $g \times g$ nonsingular submatrix of $R(\xi)$ such that the degree of its determinant is maximal among the $g \times g$ submatrices of $R(\xi)$. Since $R(\xi)$ has full row rank, we know that $\det R_1(\xi)$ is not the zero polynomial. Denote the matrix formed by the remaining columns of $R(\xi)$ by $R_2(\xi)$. It follows from Cramer's rule that $R_1^{-1}(\xi)R_2(\xi)$ is proper. $\square$

Corollary

Let $R(\frac{d}{dt})w = 0$, $R(\xi) \in \mathbb{R}^{g \times q}[\xi]$, *be a full row rank representation of the behavior* $\mathfrak{B}$. $\mathfrak{B}$ *admits an i/o representation with input* $u = \mathrm{col}(w_{i_{g+1}}, \ldots, w_{i_q})$ *and output* $y = \mathrm{col}(w_{i_1}, \ldots, w_{i_g})$.

Models with Latent Variables

$$R(\frac{d}{dt})w = M(\frac{d}{dt})\ell,$$

where $w : \mathbb{R} \to \mathbb{R}^q$ denotes the manifest variable and $\ell : \mathbb{R} \to \mathbb{R}^d$ the latent variable, and $R(\xi) \in \mathbb{R}^{g\times q}[\xi]$ and $M(\xi) \in \mathbb{R}^{g\times d}[\xi]$ are polynomial matrices with the same number of rows, namely g, and with q columns.
The *full behavior* $\mathfrak{B}_{\mathrm{f}}$ and the *manifest behavior* $\mathfrak{B}_{\mathrm{m}}$ are defined as

$$\mathfrak{B}_{\mathrm{f}} = \{(w, \ell) \in| \ (w, \ell) \text{ satisfies the equations}\},$$

$$\mathfrak{B}_{\mathrm{m}} = \{w \mid \exists \ell \text{ such that } (w, \ell) \in \mathfrak{B}_{\mathrm{f}}\}.$$

Example

Consider the mass–spring system:

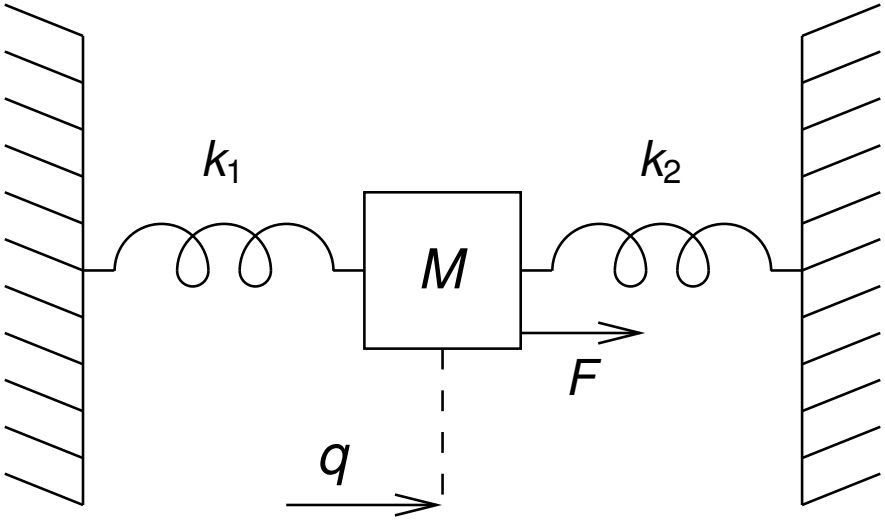

Figure: Mass–spring system.

The equation describing the behavior is

$$(k_1 + k_2)q + M(\frac{d}{dt})^2 q = F.$$

State Space Models If we observe a trajectory $w = (F, q)$ up to $t = 0$ (the past), what can we then say about (F, q) after $t = 0$ (the future)?

The future of q depends, on the one hand, on the future of F, and on the other hand on the position and velocity at $t = 0$.

If $w_i = (q_i, F_i)$ are possible trajectories, then the trajectory $w = (q, F)$ that equals w_1 up to $t = 0$ and w_2 after $t = 0$, i.e., a trajectory that concatenates the past of w_1 and the future of w_2 at $t = 0$, is also an element of the behavior, if $q_1(0) = q_2(0)$ and $(\frac{d}{dt}q_1)(0) = (\frac{d}{dt}q_2)(0)$.

Thus x forms what we call the *state* of this mechanical system. Notice that we can rewrite the system equation in terms of x as

$$\frac{d}{dt}x = \begin{bmatrix} 0 & 1 \\ \frac{-k_1 - k_2}{M} & 0 \end{bmatrix} x + \begin{bmatrix} 0 \\ \frac{1}{M} \end{bmatrix} F,$$

$$q = \begin{bmatrix} 1 & 0 \end{bmatrix} x, \quad w = \begin{bmatrix} q \\ F \end{bmatrix}$$

If (w_1, x_1) and (w_2, x_2) satisfy the equtaions, then (w, x), the concatenation of (w_1, x_1) and (w_2, x_2) at $t = 0$, also satisfies these equations provided $x_1(0) = x_2(0)$.

We call x the *state*.

The equation is first order in the latent variable x and order zero (static) in the manifest variables q and F.

Definition (Property of state)

Consider the latent variable system. Let $(w_1, \ell_1), (w_2, \ell_2) \in \mathfrak{B}_{\mathrm{f}}$ and $t_0 \in \mathbb{R}$ and suppose that ℓ_1, ℓ_2 are continuous. Define the *concatenation* of (w_1, ℓ_1) *and* (w_2, ℓ_2) *at* t_0 by (w, ℓ), with

$$w(t) = \begin{cases} w_1(t) & t < t_0, \\ w_2(t) & t \geq t_0, \end{cases} \quad \text{and} \quad \ell(t) = \begin{cases} \ell_1(t) & t < t_0, \\ \ell_2(t) & t \geq t_0. \end{cases}$$

Then $\mathfrak{B}_{\mathrm{f}}$ is said to be a *state space model*, and the latent variable ℓ is called the *state* if $\ell_1(t_0) = \ell_2(t_0)$ implies $(w, \ell) \in \mathfrak{B}_{\mathrm{f}}$.

$$E\frac{dx}{dt} + Fx + Gw = 0$$

$$\begin{aligned} \frac{d}{dt}x &= Ax + Bu, \\ y &= Cx + Du. \end{aligned}$$

$$E\frac{dx}{dt} + Fx + Gw = 0$$

$$\begin{aligned} \frac{d}{dt}x &= Ax + Bu, \\ y &= Cx + Du. \end{aligned}$$

Here $u \in \mathfrak{L}_1^{\mathrm{loc}}(\mathbb{R}, \mathbb{R}^m)$ is the input, $x \in \mathfrak{L}_1^{\mathrm{loc}}(\mathbb{R}, \mathbb{R}^n)$ is the state, and $y \in \mathfrak{L}_1^{\mathrm{loc}}(\mathbb{R}, \mathbb{R}^p)$ is the output. Consequently, $A \in \mathbb{R}^{n\times n}$, $B \in \mathbb{R}^{n\times m}$, $C \in \mathbb{R}^{p\times n}$, $D \in \mathbb{R}^{p\times m}$. The matrix D is called the *feedthrough* term.

$$E\frac{dx}{dt} + Fx + Gw = 0$$

$$\begin{aligned} \frac{d}{dt}x &= Ax + Bu, \\ y &= Cx + Du. \end{aligned}$$

Here $u \in \mathfrak{L}_1^{\mathrm{loc}}(\mathbb{R}, \mathbb{R}^m)$ is the input, $x \in \mathfrak{L}_1^{\mathrm{loc}}(\mathbb{R}, \mathbb{R}^n)$ is the state, and $y \in \mathfrak{L}_1^{\mathrm{loc}}(\mathbb{R}, \mathbb{R}^p)$ is the output. Consequently, $A \in \mathbb{R}^{n\times n}$, $B \in \mathbb{R}^{n\times m}$, $C \in \mathbb{R}^{p\times n}$, $D \in \mathbb{R}^{p\times m}$. The matrix D is called the *feedthrough* term.

In polynomial form, the equations can be written as $R(\frac{d}{dt})w = M(\frac{d}{dt})x$, with $w = \mathrm{col}(u, y)$ and $R(\xi)$, $M(\xi)$ given by

$$R(\xi) := \begin{bmatrix} B & 0 \\ -D & I \end{bmatrix}, \quad M(\xi) = \begin{bmatrix} I\xi - A \\ C \end{bmatrix}.$$

Note that the "dynamics", the part of the equations that contains derivatives, of this system is completely contained in the vector (u, x) and that moreover, only first-order derivatives occur. The equation determining y from x and u is static: it does not contain derivatives. The relation between u and x is of a proper i/o nature. To see this, write $\frac{d}{dt}x = Ax + Bu$ as $(\frac{d}{dt}I - A)x = Bu$. Since $\det(I\xi - A) \neq 0$ and since $(I\xi - A)^{-1}B$ is strictly proper, u is a maximally free variable in $\mathfrak{L}_1^{\mathrm{loc}}(\mathbb{R}, \mathbb{R}^m)$.

Note that the "dynamics", the part of the equations that contains derivatives, of this system is completely contained in the vector (u, x) and that moreover, only first-order derivatives occur. The equation determining y from x and u is static: it does not contain derivatives. The relation between u and x is of a proper i/o nature. To see this, write $\frac{d}{dt}x = Ax + Bu$ as $(\frac{d}{dt}I - A)x = Bu$. Since $\det(I\xi - A) \neq 0$ and since $(I\xi - A)^{-1}B$ is strictly proper, u is a maximally free variable in $\mathfrak{L}_1^{\mathrm{loc}}(\mathbb{R}, \mathbb{R}^m)$. The full behavior:

$$\mathfrak{B}_{\mathrm{i/s/o}} := \{(u, x, y) \in \mathfrak{L}_1^{\mathrm{loc}}(\mathbb{R}, \mathbb{R}^m \times \mathbb{R}^n \times \mathbb{R}^p) \mid \text{eq. satisfied weakly}\}$$

Note that the "dynamics", the part of the equations that contains derivatives, of this system is completely contained in the vector (u, x) and that moreover, only first-order derivatives occur. The equation determining y from x and u is static: it does not contain derivatives. The relation between u and x is of a proper i/o nature. To see this, write $\frac{d}{dt}x = Ax + Bu$ as $(\frac{d}{dt}I - A)x = Bu$. Since $\det(I\xi - A) \neq 0$ and since $(I\xi - A)^{-1}B$ is strictly proper, u is a maximally free variable in $\mathfrak{L}_1^{\mathrm{loc}}(\mathbb{R}, \mathbb{R}^m)$. The full behavior:

$$\mathfrak{B}_{\mathrm{i/s/o}} := \{(u, x, y) \in \mathfrak{L}_1^{\mathrm{loc}}(\mathbb{R}, \mathbb{R}^m \times \mathbb{R}^n \times \mathbb{R}^p) \mid \text{eq. satisfied weakly}\}$$

The *manifest* behavior is given by

$$\mathfrak{B}_{\mathrm{i/o}} := \{(u, y) \in \mathfrak{L}_1^{\mathrm{loc}}(\mathbb{R}, \mathbb{R}^m \times \mathbb{R}^p) \mid \exists x \text{ s.t. } (u, x, y) \in \mathfrak{B}_{\mathrm{i/s/o}}\}.$$

Theorem

Let $u \in \mathfrak{L}_1^{\mathrm{loc}}(\mathbb{R}, \mathbb{R}^m)$*, and define* x *by*

$$x(t) := \int_0^t e^{A(t-\tau)} Bu(\tau) d\tau.$$

Then $(u, x) \in \mathfrak{B}_{\mathrm{i/s}}$.

Corollary

Every element (u, x) *of* $\mathfrak{B}_{\mathrm{i/s}}$ *is of the form*

$$x(t) = e^{At} c + \int_0^t e^{A(t-\tau)} Bu(\tau) d\tau, \qquad c \in \mathbb{R}^n.$$

State Space Transformations

Definition

Two i/s/o representations are called *input/output equivalent* if they represent the same input/output behavior.

The i/s/o representations of a given i/o system are not unique. Indeed, consider

$$\begin{aligned} \frac{d}{dt}x &= Ax + Bu, \\ y &= Cx + Du. \end{aligned}$$

Let $S \in \mathbb{R}^{n \times n}$ be a nonsingular matrix and let (u, x, y) satisfy the state equations Define $\tilde{x} := Sx$.

Note that this corresponds to expressing the state coordinates with respect to a new basis. The differential equation governing $\tilde{x}$ is

$$\begin{aligned} \frac{d}{dt}\tilde{x} &= SAS^{-1}\tilde{x} + SBu, \\ y &= CS^{-1}\tilde{x} + Du. \end{aligned}$$

The equations show that every (u, y) that belongs to the first i/o behavior also belongs to the second i/o and vice versa. This means that both state space representations represent the same i/o behavior, and therefore they are *input/output equivalent.*

Theorem

Two state space representations parametrized by (A_1, B_1, C_1, D_1) *and* (A_2, B_2, C_2, D_2) *respectively, are input/output equivalent if there exists a nonsingular matrix* $S \in \mathbb{R}^{n\times n}$ *such that*

$$SA_1S^{-1} = A_2, \quad SB_1 = B_2, \quad C_1S^{-1} = C_2, \quad D_1 = D_2.$$

Correspondingly, we call two quadruples $(A_1, B_1, C_1, D_1), (A_2, B_2, C_2, D_2) \in \mathbb{R}^{n\times n} \times \mathbb{R}^{n\times m} \times \mathbb{R}^{p\times n} \times \mathbb{R}^{p\times m}$ equivalent, or *similar*, if there exists a nonsingular matrix $S \in \mathbb{R}^{n\times n}$ such that $SA_1S^{-1} = A_2$, $SB_1 = B_2$, $C_1S^{-1} = C_2$, and $D_1 = D_2$. The matrix S is called the corresponding state similarity transformation matrix.

Remark

Note that this theorem shows that similarity implies the same i/o behavior. However, if two representations are i/o equivalent, then the corresponding quadruples of system matrices need not be similar.

Important Issues

1. Property of State
2. General State Space Representation
3. State Space Representation Problem
4. State Elimination Problem

Controllability and Observability

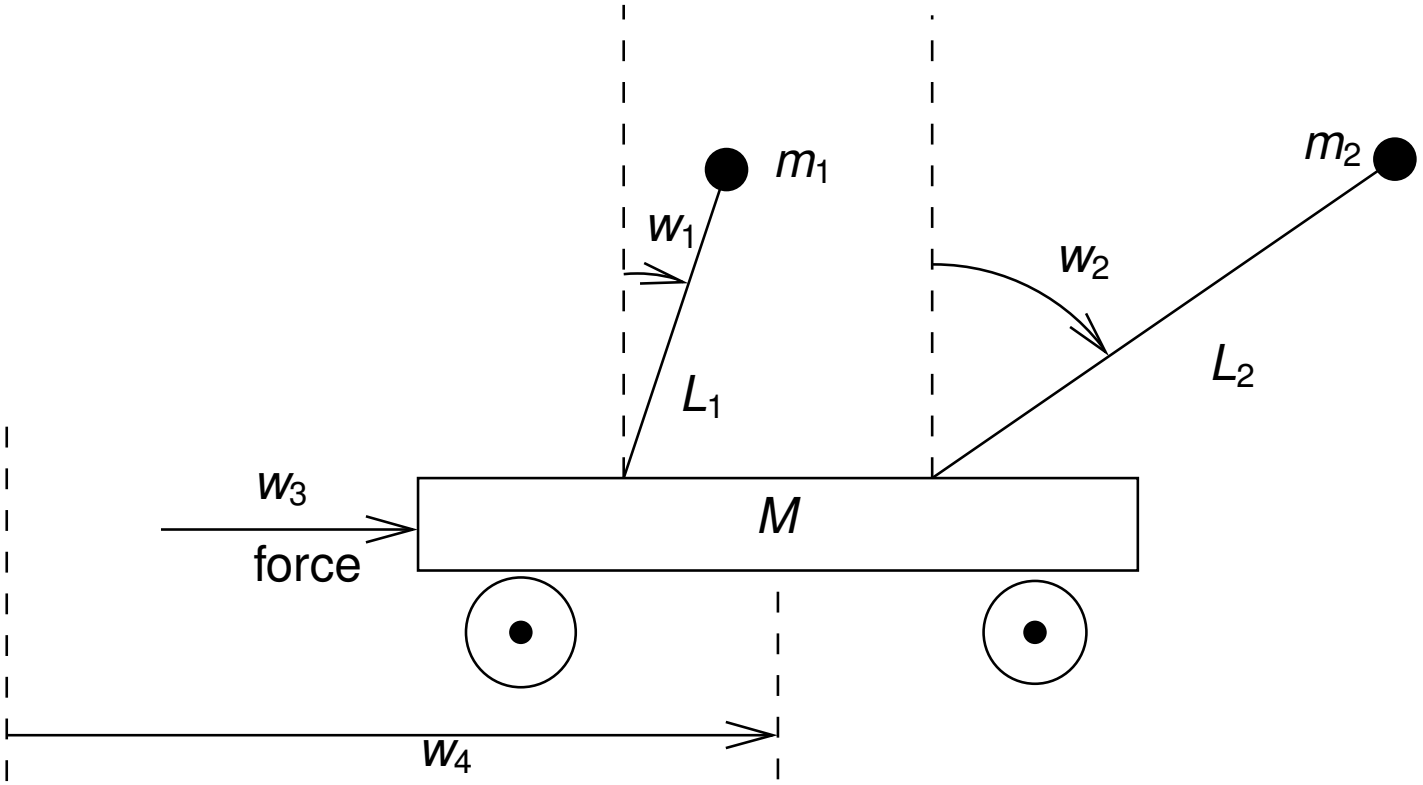

Q1 Suppose $m_1 = m_2$, $L_1 = L_2$, what can be said about w_1 relative to w_2?

Q2 Suppose $m_1 \neq m_2$, $L_1 = L_2$, what can be said about w_1?

Definition

Let $\mathfrak{B}$ be the behavior of a time-invariant dynamical system. This system is called *controllable* if for any two trajectories $w_1, w_2 \in \mathfrak{B}$ there exist a $t_1 \geq 0$ and a trajectory $w \in \mathfrak{B}$ with the property

$$w(t) = \begin{cases} w_1(t) & t \leq 0, \\ w_2(t) & t \geq t_1. \end{cases}$$

Definition

Let $\mathfrak{B}$ be the behavior of a time-invariant dynamical system. This system is called *controllable* if for any two trajectories $w_1, w_2 \in \mathfrak{B}$ there exist a $t_1 \geq 0$ and a trajectory $w \in \mathfrak{B}$ with the property

$$w(t) = \begin{cases} w_1(t) & t \leq 0, \\ w_2(t) & t \geq t_1. \end{cases}$$

Remark

Controllability can be interpreted as the opposite of autonomicity. Indeed, if the behavior $\mathfrak{B}$ is defined by $R(\frac{d}{dt})w = 0$, then it can be proved that $\mathfrak{B}$ is controllable if and only if there does not exist a matrix $S(\xi)$ such that $S(\frac{d}{dt})w$ behaves autonomously.

Definition

Let $\mathfrak{B}$ be the behavior of a time-invariant dynamical system. This system is called *controllable* if for any two trajectories $w_1, w_2 \in \mathfrak{B}$ there exist a $t_1 \geq 0$ and a trajectory $w \in \mathfrak{B}$ with the property

$$w(t) = \begin{cases} w_1(t) & t \leq 0, \\ w_2(t) & t \geq t_1. \end{cases}$$

Remark

Controllability can be interpreted as the opposite of autonomicity. Indeed, if the behavior $\mathfrak{B}$ is defined by $R(\frac{d}{dt})w = 0$, then it can be proved that $\mathfrak{B}$ is controllable if and only if there does not exist a matrix $S(\xi)$ such that $S(\frac{d}{dt})w$ behaves autonomously. Notice that if $R(\xi) = F(\xi)S(\xi)$ for some $F(\xi)$ with $\deg \det(F(\xi)) \geq 1$, then $S(\frac{d}{dt})w$ behaves autonomously.

Theorem

Consider the system defined by $R(\frac{d}{dt})w = 0$, and denote by $\mathfrak{B}$ its behavior $\mathfrak{B}$. Then $\mathfrak{B}$ is controllable if and only if the rank of the (complex) matrix $R(\lambda)$ is the same for all $\lambda \in \mathbb{C}$.

Theorem

Consider the system defined by $R(\frac{d}{dt})w = 0$, and denote by $\mathfrak{B}$ its behavior $\mathfrak{B}$. Then $\mathfrak{B}$ is controllable if and only if the rank of the (complex) matrix $R(\lambda)$ is the same for all $\lambda \in \mathbb{C}$.

Proof.

The proof follows easily by transforming $R(\xi)$ into Smith form. As a bonus we obtain that the $t_1 > 0$ from the definition can be taken arbitrarily. $\square$

Theorem

Let $R(\xi) \in \mathbb{R}^{g \times q}[\xi]$ *be of full row rank and let* $\mathfrak{B}$ *be the behavior defined by*

$$R(\frac{d}{dt})w = 0.$$

Then there exist subbehaviors $\mathfrak{B}_{\text{aut}}$ *and* $\mathfrak{B}_{\text{contr}}$ *of* $\mathfrak{B}$ *such that*

$$\mathfrak{B} = \mathfrak{B}_{\text{aut}} \oplus \mathfrak{B}_{\text{contr}},$$

where $\mathfrak{B}_{\text{contr}}$ *is controllable and* $\mathfrak{B}_{\text{aut}}$ *is autonomous, and the characteristic values of* $\mathfrak{B}_{\text{aut}}$ *are exactly those numbers* $\lambda \in \mathbb{C}$ *for which* $\operatorname{rank} R(\lambda) < g$.

Let $(A, B) \in \mathbb{R}^{n\times n} \times \mathbb{R}^{n\times m}$ and consider the i/s behavior defined by

$$\frac{d}{dt}x = Ax + Bu.$$

The *controllability matrix* of the pair (A, B) is defined as follows:

Definition

Let $(A, B) \in \mathbb{R}^{n\times n} \times \mathbb{R}^{n\times m}$. Define the matrix $\mathfrak{C} \in \mathbb{R}^{n\times nm}$ as

$$\mathfrak{C} = \begin{bmatrix} B & AB & \cdots & A^{n-1}B \end{bmatrix}.$$

$\mathfrak{C}$ is called the *controllability matrix of the pair* (A, B).

Theorem

Consider the system defined by

$$\frac{d}{dt}x = Ax + Bu.$$

The following statements are equivalent:

Theorem

Consider the system defined by

$$\frac{d}{dt}x = Ax + Bu.$$

The following statements are equivalent:

1. *The system is controllable.*

Theorem

Consider the system defined by

$$\frac{d}{dt}x = Ax + Bu.$$

The following statements are equivalent:

1. *The system is controllable.*
2. $\mathrm{rank}[I\lambda - A \;\; B] = n$ *for all* $\lambda \in \mathbb{C}$.

Theorem

Consider the system defined by

$$\frac{d}{dt}x = Ax + Bu.$$

The following statements are equivalent:

1. *The system is controllable.*
2. $\mathrm{rank}[I\lambda - A \;\; B] = n$ *for all* $\lambda \in \mathbb{C}$.
3. $\mathrm{rank}\begin{bmatrix} B & AB & \cdots & A^{n-1}B \end{bmatrix} = n.$

Theorem

Consider the system defined by

$$\frac{d}{dt}x = Ax + Bu.$$

The following statements are equivalent:

1. *The system is controllable.*
2. $\operatorname{rank}[I\lambda - A \;\; B] = n$ *for all* $\lambda \in \mathbb{C}$.
3. $\operatorname{rank}\begin{bmatrix} B & AB & \cdots & A^{n-1}B \end{bmatrix} = n.$
4. *The system is state controllable.*

Theorem

Consider the system defined by

$$\frac{d}{dt}x = Ax + Bu.$$

The following statements are equivalent:

1. *The system is controllable.*
2. $\operatorname{rank}[I\lambda - A \;\; B] = n$ *for all* $\lambda \in \mathbb{C}$.
3. $\operatorname{rank}\begin{bmatrix} B & AB & \cdots & A^{n-1}B \end{bmatrix} = n.$
4. *The system is state controllable. That is, the system can be steered from any initial state to any final state.*

Definition

Let $\mathfrak{B}$ be the behavior of a time-invariant dynamical system. This system is called *stabilizable* if for every trajectory $w \in \mathfrak{B}$, there exists a trajectory $w' \in \mathfrak{B}$ with the property

$$w'(t) = w(t) \text{ for } t \leq 0 \qquad \text{and} \qquad \lim_{t \to \infty} w'(t) = 0.$$

Definition

Let $\mathfrak{B}$ be the behavior of a time-invariant dynamical system. This system is called *stabilizable* if for every trajectory $w \in \mathfrak{B}$, there exists a trajectory $w' \in \mathfrak{B}$ with the property

$$w'(t) = w(t) \text{ for } t \leq 0 \qquad \text{and} \qquad \lim_{t \to \infty} w'(t) = 0.$$

An effective test for stabilizability is provided in the following theorem.

Theorem

Let $R(\xi) \in \mathbb{R}^{g \times q}[\xi]$. The behavior $\mathfrak{B}$ defined by $R(\frac{d}{dt})w = 0$ is stabilizable if and only if the rank of the (complex) matrix $R(\lambda)$ is the same for all $\lambda \in \mathbb{C}_+$, where $\mathbb{C}_+ = \{s \in \mathbb{C} \mid \Re s \geq 0\}$.

Definition

Let $(\mathbb{R}, \mathbb{W}_1 \times \mathbb{W}_2, \mathfrak{B})$ be a time-invariant dynamical system. Trajectories in $\mathfrak{B}$ are partitioned as (w_1, w_2) with $w_i : \mathbb{R} \to \mathbb{W}_i$, $i = 1, 2$. We say that w_2 is *observable* from w_1 if for all $(w_1, w_2), (w_1, w_2') \in \mathfrak{B}$ implies $w_2 = w_2'$.

Definition

Let $(\mathbb{R}, \mathbb{W}_1 \times \mathbb{W}_2, \mathfrak{B})$ be a time-invariant dynamical system. Trajectories in $\mathfrak{B}$ are partitioned as (w_1, w_2) with $w_i : \mathbb{R} \to \mathbb{W}_i$, $i = 1, 2$. We say that w_2 is *observable* from w_1 if for all $(w_1, w_2), (w_1, w_2') \in \mathfrak{B}$ implies $w_2 = w_2'$.

Theorem

Let $R_1(\xi) \in \mathbb{R}^{g \times q_1}[\xi]$ and $R_2(\xi) \in \mathbb{R}^{g \times q_2}[\xi]$. Let $\mathfrak{B}$ be the behavior defined by $R_1(\frac{d}{dt})w_1 = R_2(\frac{d}{dt})w_2$. Then the variable w_2 is observable from w_1 if and only if $\operatorname{rank} R_2(\lambda) = q_2$ for all $\lambda \in \mathbb{C}$.

Consider the i/s/o system

$$\begin{cases} \dfrac{d}{dt}x &= Ax + Bu, \\ y &= Cx + Du. \end{cases}$$

Denote the associated behavior by $\mathfrak{B}_{\mathrm{i/s/o}}$.

Consider the i/s/o system

$$\begin{cases} \frac{d}{dt}x &= Ax + Bu, \\ y &= Cx + Du. \end{cases}$$

Denote the associated behavior by $\mathfrak{B}_{\mathrm{i/s/o}}$.

Theorem

The state x is observable from (u, y) if and only if the matrix

$$\begin{bmatrix} I\lambda - A \\ C \end{bmatrix}$$

has rank n for all $\lambda \in \mathbb{C}$.

Theorem

Consider the system defined by

$$\frac{d}{dt}x = Ax + Bu, \quad y = Cx + Du.$$

The following statements are equivalent:

Theorem

Consider the system defined by

$$\frac{d}{dt}x = Ax + Bu, \quad y = Cx + Du.$$

The following statements are equivalent:

1. *The system is observable.*

Theorem

Consider the system defined by

$$\frac{d}{dt}x = Ax + Bu, \quad y = Cx + Du.$$

The following statements are equivalent:

1. *The system is observable.*
2. $\operatorname{rank}\begin{bmatrix} I\lambda - A \\ C \end{bmatrix} = n$ *for all* $\lambda \in \mathbb{C}$.

Theorem

Consider the system defined by

$$\frac{d}{dt}x = Ax + Bu, \quad y = Cx + Du.$$

The following statements are equivalent:

1. *The system is observable.*
2. $\operatorname{rank}\begin{bmatrix} I\lambda - A \\ C \end{bmatrix} = n$ *for all* $\lambda \in \mathbb{C}$.
3. *The rank of the observability matrix equals n.*

Theorem

Consider the system defined by

$$\frac{d}{dt}x = Ax + Bu, \quad y = Cx + Du.$$

The following statements are equivalent:

1. *The system is observable.*
2. $\operatorname{rank}\begin{bmatrix} I\lambda - A \\ C \end{bmatrix} = n$ *for all* $\lambda \in \mathbb{C}$.
3. *The rank of the observability matrix equals n.*
4. *The input/output trajectory determines the state uniquely: if* $t_1 > 0$ *and* (u_1, y_1) *and* (u_2, y_2) *satisfy the equations and for all* $t \in [0, t_1]$, $(u_1(t), y_1(t)) = (u_2(t), y_2(t))$, *then also* $x_1(t) = x_2(t)$ *for all* $t \in [0, t_1]$.

Definition

Let $(\mathbb{R}, \mathbb{W}_1 \times \mathbb{W}_2, \mathfrak{B})$ be a time-invariant dynamical system. Trajectories in $\mathfrak{B}$ are partitioned as (w_1, w_2) with $w_i : \mathbb{R} \to \mathbb{W}_i$, $i = 1, 2$. We say that w_2 is *detectable* from w_1 if $(w_1, w_2), (w_1, w_2') \in \mathfrak{B}$ implies $\lim_{t \to \infty} w_2(t) - w_2'(t) = 0$.

Definition

Let $(\mathbb{R}, \mathbb{W}_1 \times \mathbb{W}_2, \mathfrak{B})$ be a time-invariant dynamical system. Trajectories in $\mathfrak{B}$ are partitioned as (w_1, w_2) with $w_i : \mathbb{R} \to \mathbb{W}_i$, $i = 1, 2$. We say that w_2 is *detectable* from w_1 if $(w_1, w_2), (w_1, w_2') \in \mathfrak{B}$ implies $\lim_{t\to\infty} w_2(t) - w_2'(t) = 0$.

Theorem

Let $R_1(\xi) \in \mathbb{R}^{g\times q_1}[\xi]$ and $R_2(\xi) \in \mathbb{R}^{g\times q_2}[\xi]$. Let $\mathfrak{B}$ be the behavior defined by $R_1(\frac{d}{dt})w_1 = R_2(\frac{d}{dt})w_2$. Then the variable w_2 is detectable from w_1 if and only if $\operatorname{rank} R_2(\lambda) = q_2$ for all $\lambda \in \mathbb{C}_+$, where $\mathbb{C}_+ = \{s \in \mathbb{C} \mid \Re s \geq 0\}$.

Theorem

Theorem

1. *Let* $(A, c) \in \mathbb{R}^{n\times n} \times \mathbb{R}^{1\times n}$ *and define* $p(\xi) \in \mathbb{R}[\xi]$ *and* $r(\xi) \in \mathbb{R}^{1\times n}[\xi]$ *as*

   $$p(\xi) := \det(I\xi - A),\ r(\xi) = [r_1(\xi), \ldots, r_n(\xi)] := p(\xi)c(I\xi - A)^{-1}.$$

   Then (A, c) *is observable if and only if the* $n + 1$ *polynomials* $p(\xi)$, $r_1(\xi)$,...,$r_n(\xi)$ *have no common roots.*

Theorem

1. *Let* $(A, c) \in \mathbb{R}^{n\times n} \times \mathbb{R}^{1\times n}$ *and define* $p(\xi) \in \mathbb{R}[\xi]$ *and* $r(\xi) \in \mathbb{R}^{1\times n}[\xi]$ *as*

   $$p(\xi) := \det(I\xi - A),\ r(\xi) = [r_1(\xi), \ldots, r_n(\xi)] := p(\xi)c(I\xi - A)^{-1}.$$

   Then (A, c) *is observable if and only if the* $n+1$ *polynomials* $p(\xi)$, $r_1(\xi)$,...,$r_n(\xi)$ *have no common roots.*
2. *Let* $(A, b) \in \mathbb{R}^{n\times n} \times \mathbb{R}^{n\times 1}$ *and define* $p(\xi) \in \mathbb{R}[\xi]$ *and* $s(\xi) \in \mathbb{R}^{n\times 1}[\xi]$ *as*

   $$p(\xi) := \det(I\xi - A),\ s(\xi) = [s_1(\xi), \ldots, s_n(\xi)]^T := (I\xi - A)^{-1} bp(\xi).$$

   Then (A, b) *is controllable if and only if the* $n+1$ *polynomials* $p(\xi)$, $s_1(\xi)$,...,$s_n(\xi)$ *have no common roots.*

Elimination of Latent Variables

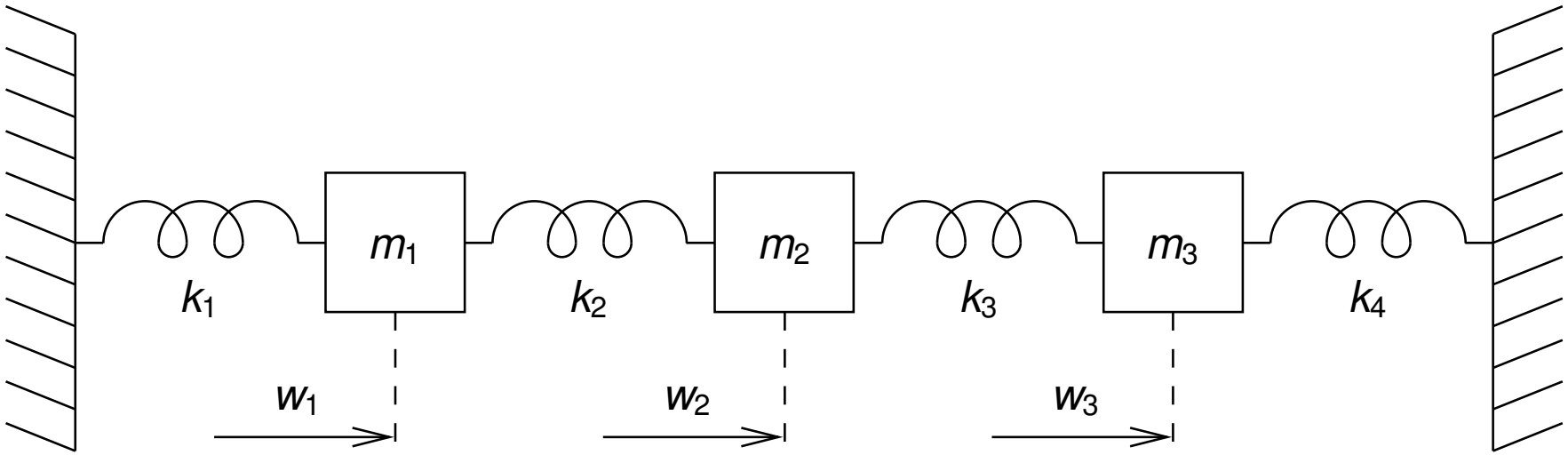

The relations between the variables w_1, w_2, w_3 are given by

$$\begin{aligned}
\frac{d^2}{dt^2} w_1 &= -k_1 w_1 + k_2(w_2 - w_1), \\
\frac{d^2}{dt^2} w_2 &= k_2(w_1 - w_2) + k_3(w_3 - w_2), \\
\frac{d^2}{dt^2} w_3 &= k_3(w_2 - w_3) - k_4 w_3.
\end{aligned}$$

The relation that we are after is that between w_1 and w_3. The equations above determine this relation only implicitly: eliminate w_2!

From the first equation we obtain

$$w_2 = 2w_1 + \frac{d^2}{dt^2} w_1, \qquad \frac{d^2}{dt^2} w_2 = 2\frac{d^2}{dt^2} w_1 + \frac{d^4}{dt^4} w_1,$$

Substituting this expression for w_2 and $\frac{d^2}{dt^2} w_2$ in the second and third equations of yields

$$\begin{aligned} 3w_1 + 4\frac{d^2}{dt^2} w_1 + \frac{d^4}{dt^4} w_1 - w_3 &= 0, \\ 2w_1 + \frac{d^2}{dt^2} w_1 - 2w_3 - \frac{d^2}{dt^2} w_3 &= 0. \end{aligned}$$

Notice that these equations do not contain w_2.

Theorem (Elimination Theorem)

Let $R(\xi) \in \mathbb{R}^{g\times q}[\xi]$, $M(\xi) \in \mathbb{R}^{g\times d}[\xi]$, *and denote by* $\mathfrak{B}_{\mathrm{f}}$ *the full behavior:*

$$\mathfrak{B}_{\mathrm{f}} = \{(w,\ell) \in \mathcal{C}^\infty\mathbb{R}, \mathbb{R}^q \times \mathbb{R}^d) \mid \ R(\frac{d}{dt})w = M(\frac{d}{dt})\ell\}.$$

Let the unimodular matrix $U(\xi) \in \mathbb{R}^{g\times g}[\xi]$ *be such that*

$$U(\xi)M(\xi) = \begin{bmatrix} 0 \\ M''(\xi) \end{bmatrix}, \qquad U(\xi)R(\xi) = \begin{bmatrix} R'(\xi) \\ R''(\xi) \end{bmatrix},$$

with $M''(\xi)$ *of full row rank. Then the manifest behavior*

$$\begin{aligned}\mathfrak{B} &= \{w \in \mathcal{C}^\infty(\mathbb{R},\mathbb{R}^q) \mid \exists\, \ell \in \mathcal{C}^\infty(\mathbb{R},\mathbb{R}^d) \text{ s.t. } R(\frac{d}{dt})w = M(\frac{d}{dt})\ell\} \\ &= \{w \in \mathcal{C}^\infty(\mathbb{R},\mathbb{R}^q) \mid R'(\frac{d}{dt})w = 0\}.\end{aligned}$$

In the example of the mechanical system the polynomial matrices $R(\xi) \in \mathbb{R}^{3\times 2}[\xi]$ and $M(\xi) \in \mathbb{R}^{3\times 1}[\xi]$ are given by

$$R(\xi) = \begin{bmatrix} 2+\xi^2 & 0 \\ 1 & 1 \\ 0 & 2+\xi^2 \end{bmatrix}, \qquad M(\xi) = \begin{bmatrix} 1 \\ 2+\xi^2 \\ 1 \end{bmatrix}.$$

Redefine $w := \mathrm{col}(w_1, w_3)$ and $\ell := w_2$ so that:

$$R(\frac{d}{dt})w = M(\frac{d}{dt})\ell.$$

Subtract the first row of $M(\xi)$ from the third row and multiplied by $\xi^2 + 2$ from the second row. Call the resulting matrix $\tilde{M}(\xi)$. Treat $R(\xi)$ analogously to obtain $\tilde{R}(\xi)$. Then

$$\tilde{R}(\xi) = \begin{bmatrix} 2+\xi^2 & 0 \\ 3+4\xi^2+\xi^4 & -1 \\ -2-\xi^2 & 2+\xi^2 \end{bmatrix}, \qquad \tilde{M}(\xi) = \begin{bmatrix} 1 \\ 0 \\ 0 \end{bmatrix}.$$

It is clear that the first row of $\tilde{M}(\xi)$ is of full row rank.

According to the Elimination Theorem we conclude

$$
\begin{aligned}
3w_1 + 4\frac{d^2}{dt^2}w_1 + \frac{d^4}{dt^4}w_1 - w_3 &= 0, \\
-2w_1 - \frac{d^2}{dt^2}w_1 + 2w_3 + \frac{d^2}{dt^2}w_3 &= 0.
\end{aligned}
$$

Let $p_i(\xi), q_i(\xi) \in \mathbb{R}[\xi],\ i = 1, 2$. Consider the i/o systems

$$\Sigma_1 :\ p_1(\frac{d}{dt})y_1 = q_1(\frac{d}{dt})u_1, \quad \Sigma_2 :\ p_2(\frac{d}{dt})y_2 = q_2(\frac{d}{dt})u_2.$$

The series interconnection of the associated i/o behaviors is defined by the interconnecting equation

$$y_1 = u_2.$$

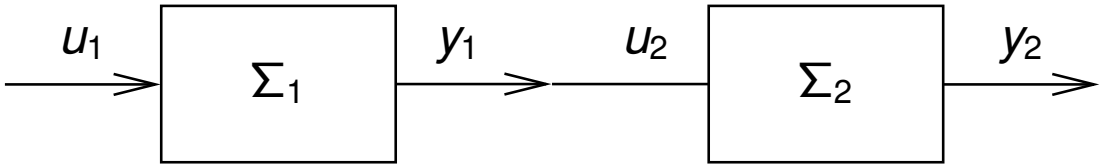

Suppose that we are interested in the relation between the "external" variables u_1 and y_2. Define $R(\xi)$ and $M(\xi)$ as follows:

$$R(\xi) := \begin{bmatrix} q_1(\xi) & 0 \\ 0 & p_2(\xi) \\ 0 & 0 \end{bmatrix}, \quad M(\xi) := \begin{bmatrix} p_1(\xi) & 0 \\ 0 & q_2(\xi) \\ -1 & 1 \end{bmatrix}.$$

Then:

$$R(\frac{d}{dt}) \begin{bmatrix} u_1 \\ y_2 \end{bmatrix} = M(\frac{d}{dt}) \begin{bmatrix} y_1 \\ u_2 \end{bmatrix}.$$

Define unimodular matrices $U_1(\xi), U_2(\xi), U_3(\xi)$ as follows:

$$U_1(\xi) = \begin{pmatrix} 1 & 0 & p_1(\xi) \\ 0 & 1 & 0 \\ 0 & 0 & 1 \end{pmatrix} \quad U_2(\xi) = \begin{pmatrix} a(\xi) & b(\xi) & 0 \\ -\bar{q}_2(\xi) & \bar{p}_1(\xi) & 0 \\ 0 & 0 & 1 \end{pmatrix}$$

$$U_3(\xi) = \begin{pmatrix} 1 & 0 & 0 \\ 0 & 0 & 1 \\ 0 & 1 & 0 \end{pmatrix}$$

Then:

$$U_3(\xi)U_2(\xi)U_1(\xi)M(\xi) = \begin{pmatrix} 0 & c(\xi) \\ -1 & 1 \\ 0 & 0 \end{pmatrix}$$

and

$$U_3(\xi)U_2(\xi)U_1(\xi)R(\xi) = \begin{pmatrix} a(\xi)q_1(\xi) & b(\xi)p_2(\xi) \\ 0 & 0 \\ -q_1(\xi)\bar{q}_2(\xi) & \bar{p}_1(\xi)p_2(\xi) \end{pmatrix}$$

It follows that the relation between u_1 and y_2 is described by the third row of $U_3(\xi)U_2(\xi)U_1(\xi)R(\xi)$:

$$\bar{p}_1(\frac{d}{dt})p_2(\frac{d}{dt})y_2 = q_1(\frac{d}{dt})\bar{q}_2(\frac{d}{dt})u_1.$$

Theorem

$$\frac{d}{dt}x = Ax + bu,\ y = cx,$$

Define $\bar{p}(\xi) \in \mathbb{R}[\xi]$ *and* $\bar{r}(\xi) \in \mathbb{R}^{1\times n}[\xi]$ *by*

$$\bar{p}(\xi) := \det(I\xi - A) \quad \bar{r}(\xi) := \bar{p}(\xi)c(I\xi - A)^{-1}.$$

Let $g(\xi)$ *be the greatest common divisor of* $(\bar{p}(\xi), \bar{r}_1(\xi), \ldots, \bar{r}_n(\xi))$. *Define the polynomials* $p(\xi)$ *and* $q(\xi)$ *by*

$$p(\xi) := \frac{\bar{p}(\xi)}{g(\xi)} \text{ and } q(\xi) := \frac{\bar{r}(\xi)}{g(\xi)}b.$$

Then the i/o behavior of the i/s/o representation is given by

$$p(\frac{d}{dt})y = q(\frac{d}{dt})u.$$

Now consider the i/o system described by

$$p(\frac{d}{dt})y = q(\frac{d}{dt})u.$$

Now consider the i/o system described by

$$p(\frac{d}{dt})y = q(\frac{d}{dt})u.$$

The realization problem is: Does there exist an i/s/o representation of it, and if the answer is affirmative, how can we obtain this i/s/o representation?

Now consider the i/o system described by

$$p(\frac{d}{dt})y = q(\frac{d}{dt})u.$$

The realization problem is: Does there exist an i/s/o representation of it, and if the answer is affirmative, how can we obtain this i/s/o representation?

In mathematical terms, the state representation problem is this:

Definition

State Representation Problem Given $\mathfrak{B}_{\mathrm{i/o}}$, find $n' \in \mathbb{N}$ and four matrices $A, b, c, d \in \mathbb{R}^{n' \times n'} \times \mathbb{R}^{n' \times 1} \times \mathbb{R}^{1 \times n'} \times \mathbb{R}^{1 \times 1}$ such that the i/o behavior of

$$\begin{aligned} \frac{d}{dt}x &= Ax + bu, \\ y &= cx + du \end{aligned}$$

is exactly $\mathfrak{B}_{\mathrm{i/o}}$.

Define $(A, b, c, d) \in \mathbb{R}^{n\times n} \times \mathbb{R}^{n\times 1} \times \mathbb{R}^{1\times n}$ by

$$A := \begin{bmatrix} 0 & \dots & \dots & \dots & 0 & -p_0 \\ 1 & 0 & \dots & \dots & \dots & -p_1 \\ 0 & 1 & 0 & \dots & \dots & -p_2 \\ \vdots & \ddots & \ddots & & & \vdots \\ 0 & \dots & 0 & 1 & 0 & -p_{n-2} \\ 0 & \dots & \dots & 0 & 1 & -p_{n-1} \end{bmatrix}, \quad b := \begin{bmatrix} \tilde{q}_0 \\ \tilde{q}_1 \\ \vdots \\ \vdots \\ \tilde{q}_{n-2} \\ \tilde{q}_{n-1} \end{bmatrix},$$

$$c := \begin{bmatrix} 0 & \dots & \dots & \dots & 0 & 1 \end{bmatrix}, \qquad d := q_n.$$

Define $(A, b, c, d) \in \mathbb{R}^{n\times n} \times \mathbb{R}^{n\times 1} \times \mathbb{R}^{1\times n}$ by

$$A := \begin{bmatrix} 0 & \dots & \dots & \dots & 0 & -p_0 \\ 1 & 0 & \dots & \dots & \dots & -p_1 \\ 0 & 1 & 0 & \dots & \dots & -p_2 \\ \vdots & \ddots & \ddots & & & \vdots \\ 0 & \dots & 0 & 1 & 0 & -p_{n-2} \\ 0 & \dots & \dots & 0 & 1 & -p_{n-1} \end{bmatrix}, \quad b := \begin{bmatrix} \tilde{q}_0 \\ \tilde{q}_1 \\ \vdots \\ \vdots \\ \tilde{q}_{n-2} \\ \tilde{q}_{n-1} \end{bmatrix},$$

$$c := \begin{bmatrix} 0 & \dots & \dots & \dots & 0 & 1 \end{bmatrix}, \qquad d := q_n.$$

Theorem

$$\frac{d}{dt}x = Ax + bu, \; y = cx + du$$

is an i/s/o representation.

Define $(A, b, c, d) \in \mathbb{R}^{n\times n} \times \mathbb{R}^{n\times 1} \times \mathbb{R}^{1\times n}$ by

$$A := \begin{bmatrix} 0 & \dots & \dots & \dots & 0 & -p_0 \\ 1 & 0 & \dots & \dots & \dots & -p_1 \\ 0 & 1 & 0 & \dots & \dots & -p_2 \\ \vdots & \ddots & \ddots & & & \vdots \\ 0 & \dots & 0 & 1 & 0 & -p_{n-2} \\ 0 & \dots & \dots & 0 & 1 & -p_{n-1} \end{bmatrix}, \quad b := \begin{bmatrix} \tilde{q}_0 \\ \tilde{q}_1 \\ \vdots \\ \vdots \\ \tilde{q}_{n-2} \\ \tilde{q}_{n-1} \end{bmatrix},$$

$$c := \begin{bmatrix} 0 & \dots & \dots & \dots & 0 & 1 \end{bmatrix}, \qquad d := q_n.$$

Theorem

$$\frac{d}{dt}x = Ax + bu, \; y = cx + du$$

is an i/s/o representation.

Proof.

Straightforward application of the elimination theorem. □

Consider the i/o system

$$p(\frac{d}{dt})y = q(\frac{d}{dt})u.$$

Define (A, b, c) by

$$A = \begin{bmatrix} 0 & 1 & 0 & \cdots & \cdots & 0 \\ 0 & 0 & 1 & 0 \cdots & 0 & \\ \vdots & & \ddots & \ddots & & \vdots \\ \vdots & & & \ddots & \ddots & \vdots \\ 0 & \cdots & \cdots & \cdots & 0 & 1 \\ -p_0 & -p_1 & \cdots & \cdots & \cdots & -p_{n-1} \end{bmatrix}, b = \begin{bmatrix} 0 \\ \vdots \\ \vdots \\ 0 \\ 1 \end{bmatrix},$$

$$c = \begin{bmatrix} q_0 & q_1 \cdots \cdots \cdots & q_{n-1} \end{bmatrix},$$

Theorem

$$\begin{aligned} \frac{d}{dt}x &= Ax + bu, \\ y &= cx. \end{aligned} \tag{1}$$

Assume that $p(\xi)$ and $q(\xi)$ have no common factors, i.e., the i/o system is controllable. Then the i/o behavior is described by $p(\frac{d}{dt})y = q(\frac{d}{dt})u$.

Proof:

$$\bar{p}(\xi) = \det(I\xi - A),$$
$$\bar{r}(\xi) = \bar{p}(\xi)c(I\xi - A)^{-1},$$
$$\bar{s}(\xi) = \bar{p}(\xi)(I\xi - A)^{-1}b.$$

$$\bar{p}(\xi) = p(\xi), \qquad \bar{s}(\xi) = [1\ \xi\ \xi^2 \cdots \xi^{n-1}]^T.$$

It follows that $\tilde{q}(\xi) = c\bar{s}(\xi)$, and hence, that $\tilde{q}(\xi) = \bar{r}(\xi)b$. Since by assumption $p(\xi)$ and $q(\xi)$ have no common factors, neither do $p(\xi)$ and $\tilde{q}(\xi)$, and as a consequence, $\bar{p}(\xi)$ and $\bar{r}(\xi)$ have no common factors. It follows that the i/o behavior of is described by $p(\frac{d}{dt})y = q(\frac{d}{dt})u$, where $q(\xi) := \bar{r}(\xi)b$.

We have studied several representations of linear time-invariant differential systems:

1. $R(\frac{d}{dt})w = 0$. For obvious reasons we call this a *kernel representation.*

We have studied several representations of linear time-invariant differential systems:

1. $R(\frac{d}{dt})w = 0$. For obvious reasons we call this a *kernel representation.*
2. $R(\frac{d}{dt})w = M(\frac{d}{dt})\ell$. Often obtained as a result of modeling from first principles. By eliminating the latent variable ℓ we obtain a kernel representation for the manifest behavior.

We have studied several representations of linear time-invariant differential systems:

1. $R(\frac{d}{dt})w = 0$. For obvious reasons we call this a *kernel representation.*
2. $R(\frac{d}{dt})w = M(\frac{d}{dt})\ell$. Often obtained as a result of modeling from first principles. By eliminating the latent variable ℓ we obtain a kernel representation for the manifest behavior.
3. $P(\frac{d}{dt})y = Q(\frac{d}{dt})u$, with $P^{-1}(\xi)Q(\xi)$ proper. Every kernel representation can be brought into such an input/output form by an appropriate partition of w in u and y.

We have studied several representations of linear time-invariant differential systems:

1. $R(\frac{d}{dt})w = 0$. For obvious reasons we call this a *kernel representation.*
2. $R(\frac{d}{dt})w = M(\frac{d}{dt})\ell$. Often obtained as a result of modeling from first principles. By eliminating the latent variable ℓ we obtain a kernel representation for the manifest behavior.
3. $P(\frac{d}{dt})y = Q(\frac{d}{dt})u$, with $P^{-1}(\xi)Q(\xi)$ proper. Every kernel representation can be brought into such an input/output form by an appropriate partition of w in u and y.
4. $\frac{d}{dt}x = Ax + Bu$, $y = Cx + Du$. All systems defined by a kernel representation can be brought into this form, although we only proved this for SISO systems.

We have studied several representations of linear time-invariant differential systems:

1. $R(\frac{d}{dt})w = 0$. For obvious reasons we call this a *kernel representation.*
2. $R(\frac{d}{dt})w = M(\frac{d}{dt})\ell$. Often obtained as a result of modeling from first principles. By eliminating the latent variable ℓ we obtain a kernel representation for the manifest behavior.
3. $P(\frac{d}{dt})y = Q(\frac{d}{dt})u$, with $P^{-1}(\xi)Q(\xi)$ proper. Every kernel representation can be brought into such an input/output form by an appropriate partition of w in u and y.
4. $\frac{d}{dt}x = Ax + Bu$, $y = Cx + Du$. All systems defined by a kernel representation can be brought into this form, although we only proved this for SISO systems.
5. One more category: $w = M(\frac{d}{dt})\ell$. These are called image representations. How general are they?

Theorem

Let $R(\xi) \in \mathbb{R}^{g \times q}[\xi]$ *and let* $\mathfrak{B}_{\text{ker}}$ *be defined by* $R\frac{d}{dt})w = 0$*. Then there exists an integer* m *and a matrix* $M(\xi) \in \mathbb{R}^{q \times m}[\xi]$ *such that, with* $\mathfrak{B}_{\text{im}}$ *the manifest behavior of* $w = M(\frac{d}{dt})\ell$*, we have* $\mathfrak{B}_{\text{ker}} = \mathfrak{B}_{\text{im}}$ *if and only if* $\mathfrak{B}_{\text{ker}}$ *is controllable.*

Summary

1. $R(\frac{d}{dt})w = 0$. All equivalent representations are obtained as $U(\xi)P(\xi)$ with $U(\xi)$ unimodular.

Summary

1. $R(\frac{d}{dt})w = 0$. All equivalent representations are obtained as $U(\xi)P(\xi)$ with $U(\xi)$ unimodular.
2. Full row rank and minimality. These properties are equivalent.

Summary

1. $R(\frac{d}{dt})w = 0$. All equivalent representations are obtained as $U(\xi)P(\xi)$ with $U(\xi)$ unimodular.
2. Full row rank and minimality. These properties are equivalent.
3. Autonomous: $P(\frac{d}{dt})w = 0$. Complete description of the behavior in terms of exponentials.

Summary

1. $R(\frac{d}{dt})w = 0$. All equivalent representations are obtained as $U(\xi)P(\xi)$ with $U(\xi)$ unimodular.
2. Full row rank and minimality. These properties are equivalent.
3. Autonomous: $P(\frac{d}{dt})w = 0$. Complete description of the behavior in terms of exponentials.
4. Input-output: $P(\frac{d}{dt})y = Q(\frac{d}{dt})u$. Complete description of the behavior.

Summary

1. $R(\frac{d}{dt})w = 0$. All equivalent representations are obtained as $U(\xi)P(\xi)$ with $U(\xi)$ unimodular.
2. Full row rank and minimality. These properties are equivalent.
3. Autonomous: $P(\frac{d}{dt})w = 0$. Complete description of the behavior in terms of exponentials.
4. Input-output: $P(\frac{d}{dt})y = Q(\frac{d}{dt})u$. Complete description of the behavior.
5. Controllability. Main result: Controllability of $R(\frac{d}{dt})w = 0$ is equivalent to $\operatorname{rank} R(\lambda)$ is constant.

Summary

1. $R(\frac{d}{dt})w = 0$. All equivalent representations are obtained as $U(\xi)P(\xi)$ with $U(\xi)$ unimodular.
2. Full row rank and minimality. These properties are equivalent.
3. Autonomous: $P(\frac{d}{dt})w = 0$. Complete description of the behavior in terms of exponentials.
4. Input-output: $P(\frac{d}{dt})y = Q(\frac{d}{dt})u$. Complete description of the behavior.
5. Controllability. Main result: Controllability of $R(\frac{d}{dt})w = 0$ is equivalent to $\operatorname{rank} R(\lambda)$ is constant.
6. Observability. Main result: $R(\frac{d}{dt})w = M(\frac{d}{dt})\ell$, then ℓ observable from w if and only if $M(\lambda)$ has full column rank.

Summary

1. $R(\frac{d}{dt})w = 0$. All equivalent representations are obtained as $U(\xi)P(\xi)$ with $U(\xi)$ unimodular.
2. Full row rank and minimality. These properties are equivalent.
3. Autonomous: $P(\frac{d}{dt})w = 0$. Complete description of the behavior in terms of exponentials.
4. Input-output: $P(\frac{d}{dt})y = Q(\frac{d}{dt})u$. Complete description of the behavior.
5. Controllability. Main result: Controllability of $R(\frac{d}{dt})w = 0$ is equivalent to $\operatorname{rank} R(\lambda)$ is constant.
6. Observability. Main result: $R(\frac{d}{dt})w = M(\frac{d}{dt})\ell$, then ℓ observable from w if and only if $M(\lambda)$ has full column rank.
7. Elimination. Algorithm to eliminate ℓ from $R(\frac{d}{dt})w = M(\frac{d}{dt})\ell$.

Summary

1. $R(\frac{d}{dt})w = 0$. All equivalent representations are obtained as $U(\xi)P(\xi)$ with $U(\xi)$ unimodular.
2. Full row rank and minimality. These properties are equivalent.
3. Autonomous: $P(\frac{d}{dt})w = 0$. Complete description of the behavior in terms of exponentials.
4. Input-output: $P(\frac{d}{dt})y = Q(\frac{d}{dt})u$. Complete description of the behavior.
5. Controllability. Main result: Controllability of $R(\frac{d}{dt})w = 0$ is equivalent to $\operatorname{rank} R(\lambda)$ is constant.
6. Observability. Main result: $R(\frac{d}{dt})w = M(\frac{d}{dt})\ell$, then ℓ observable from w if and only if $M(\lambda)$ has full column rank.
7. Elimination. Algorithm to eliminate ℓ from $R(\frac{d}{dt})w = M(\frac{d}{dt})\ell$.
8. Image representations $w = M(\frac{d}{dt})\ell$: A behavior admits an image representation if and only if it is controllable.